SISTEMA HETERODINO CROSS

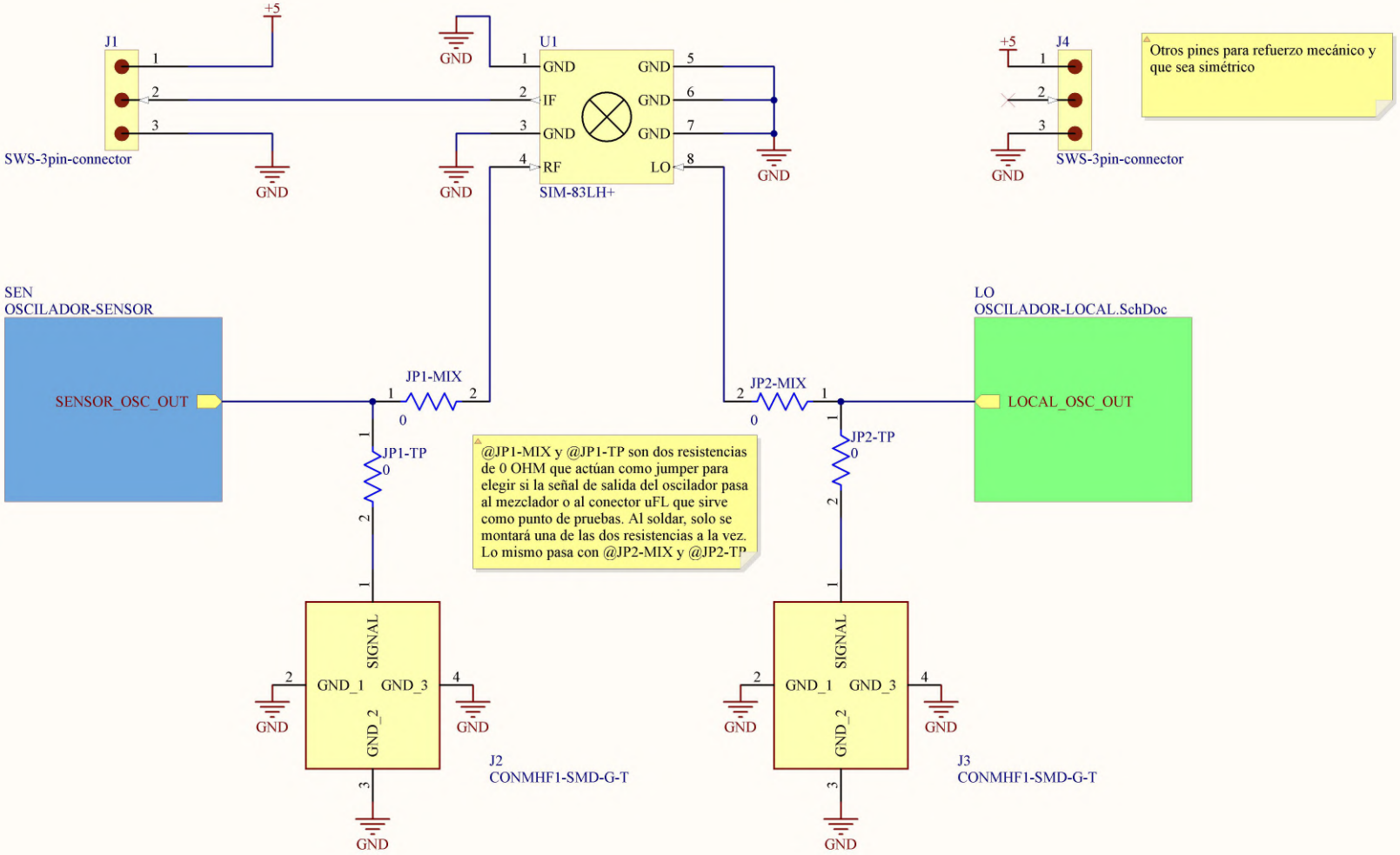

Title: *SOE - Sistema heterodino*		**Author:** Mario de Miguel	
		Approved: *	
Size: A4	**Prj:** SWSH-Cross	**Edited:** 04/02/2026	
Date: 04/02/2026 11:03:37	Sheet 1 of 3	**Variant:** [No Variations]	
Git Hash: Not in version control		**SW Version:** 25.3.3.18	
File: C:\Users\worbb\Desktop\IMA\PCB\Altium\SWS_Heterodyne\PRINCIPAL.SchDoc			

OSCILADOR SENSOR

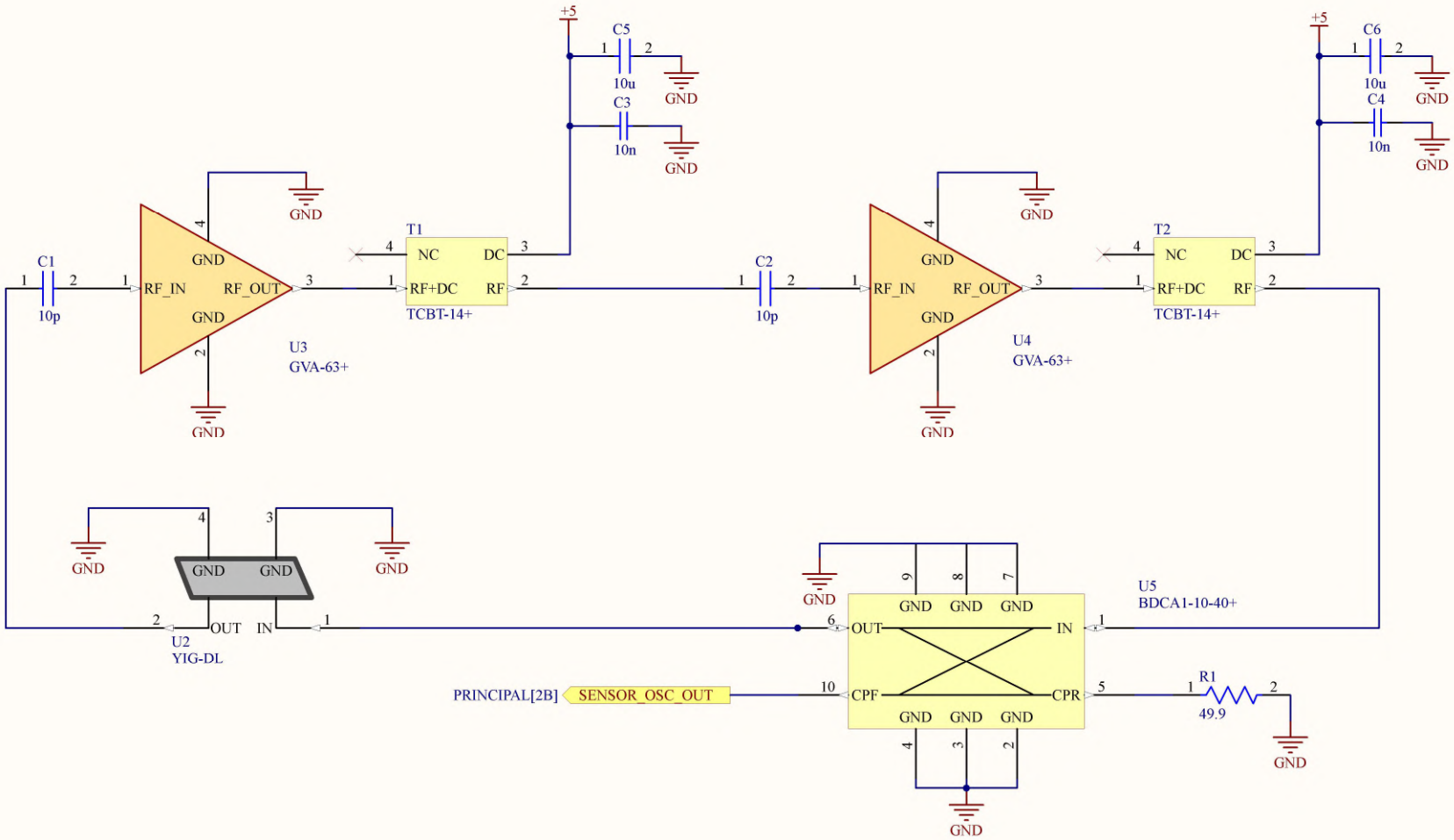

Title: *Oscilador de YIG sensor*		**Author:** Mario de Miguel	*
		Approved: *	*
Size: A4	**Prj:** SWSH-Cross	**Edited:** 04/02/2026	*
Date: 04/02/2026 11:03:37	Sheet 2 of 3	**Variant:** [No Variations]	*
Git Hash: Not in version control		**SW Version:** 25.3.3.18	*
File: C:\Users\worbb\Desktop\IMA\PCB\Altium\SWS_Heterodyne\OSCILADOR-SENSOR.SchDoc			

OSCILADOR LOCAL

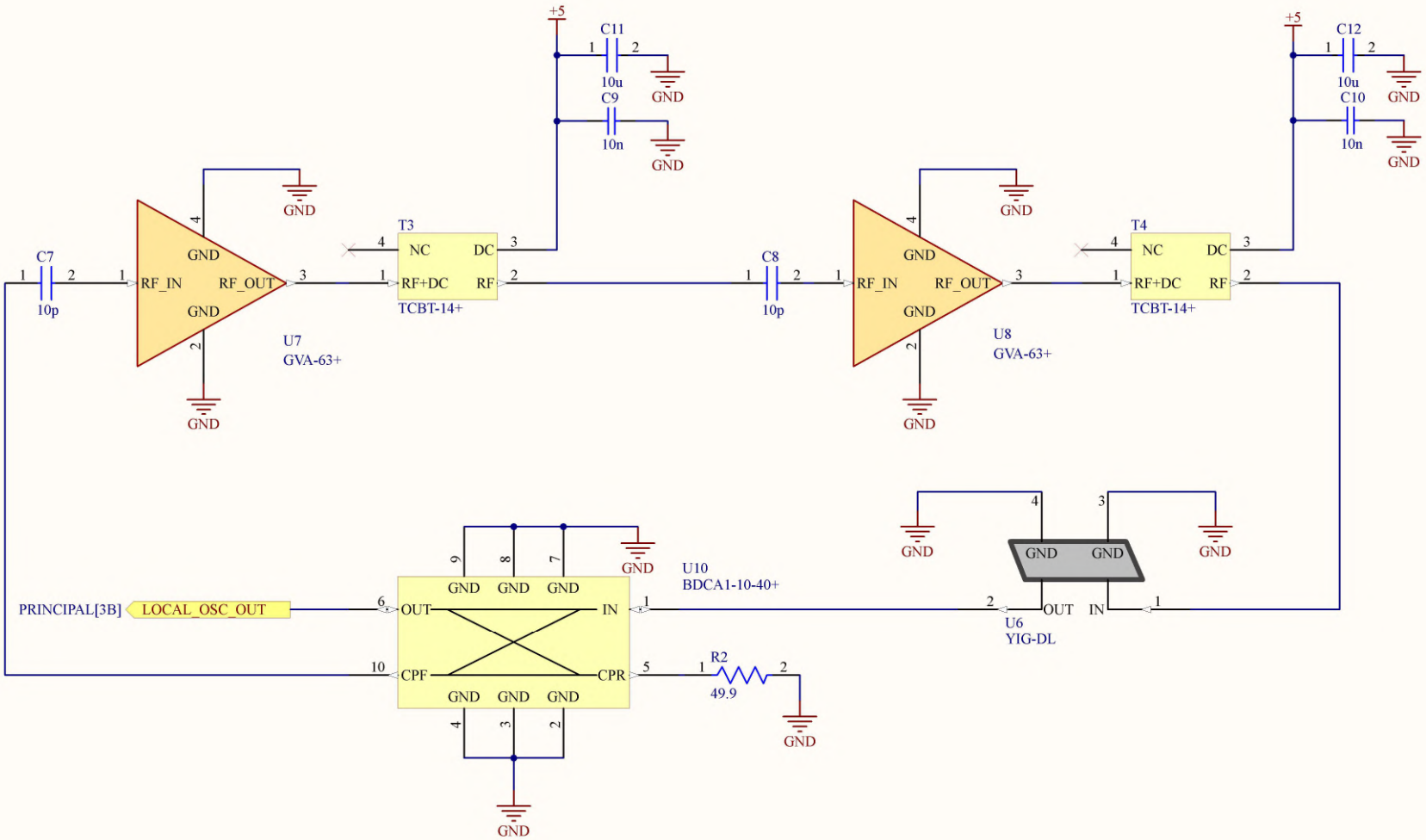

Title: *Oscilador de YIG referencia*		Author: Mario de Miguel	*
		Approved: *	*
Size: A4	Prj: SWSH-Cross	Edited: 04/02/2026	*
Date: 04/02/2026 11:03:37	Sheet 3 of 3	Variant: [No Variations]	*
Git Hash: Not in version control		SW Version: 25.3.3.18	*
File: C:\Users\worbb\Desktop\IMA\PCB\Altium\SWS_Heterodyne\OSCILADOR-LOCAL.SchDoc			